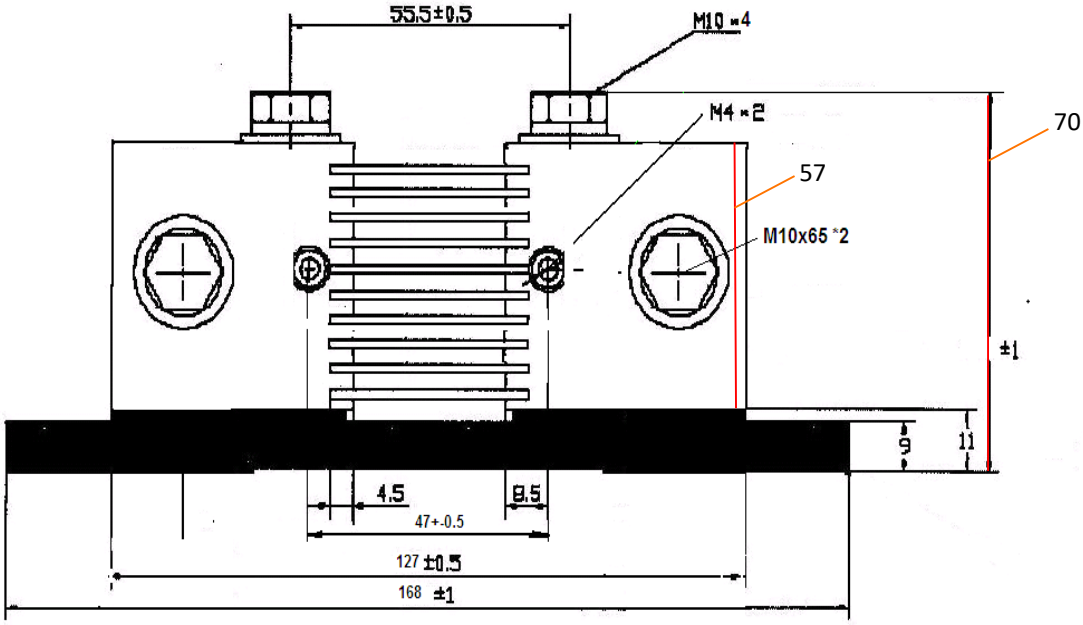

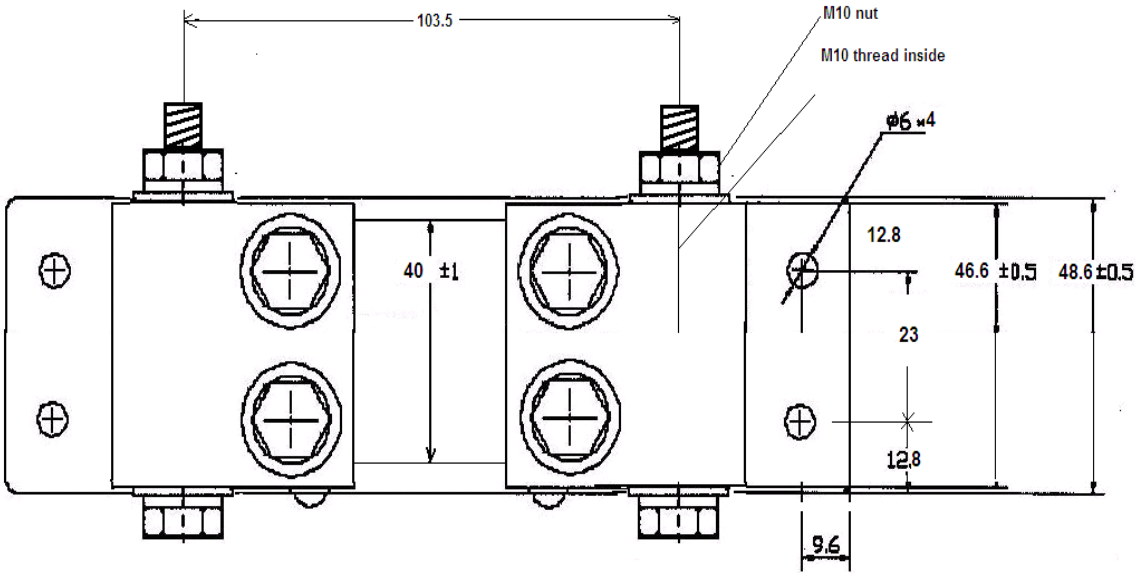

Shunt 2000A/50mV